Dean Goods Chassis Kit

This chassis kit is designed to fit the body from the popular Mainline/Replica/Bachmann/Hornby model of this long-lived class, which has appeared in several versions over the years. It could also suit the elderly K's whitemetal kit, though some of the castings may need to be fettled to accommodate the chassis.

Only very simple modifications to the RTR body are required to gain clearance for the replacement chassis and these are detailed in our instructions. You can, of course, add as much extra cosmetic detail as you wish to bring the body up to the standard of its new underpinnings. Unfortunately there doesn't seem to be a definitive 'MRJ-type' article on modeling the Dean Goods and the best and most accessible prototype reference material is probably in Volume 1 of J.H.Russell's *A Pictorial Record of Great Western Engines*, which covers the Gooch, Armstrong and Dean locomotives. It includes drawings and some invaluable shots of the backhead detail.

The Dean Goods has shallow frames and a short firebox, which defeated earlier manufacturers and led to some very heavy-looking models that were nevertheless badly underpowered. To create a prototypically, airy appearance and allow a decent-sized, high-torque motor to be fitted, we've designed the kit with the transmission sitting low in the frames. This means the motor diameter is dictated by the frame spacing. Consequently, P4 versions will accept motors up to the size of a Mashima 1424 flat can; the Mashima 1224 is the maximum for EM. The Mashima 1024 (a seriously powerful motor in spite of its size!) is recommended for OO and if you wish to compensate the OO chassis then you'll also need to obtain a converter plate from us, which comes with its own instructions.

A number of manufacturers produce suitable 14 spoke wheels for this locomotive:

Alan Gibson Wheels, Unit 1, Acorn Centre, Barry Street, Oldham, Lancs. OL1 3NE
Ref. (G4862E) The crankpins and their bushes will need to be bought separately.

Markits Ltd. PO Box 40, Watford, Hertfordshire. WD2 5TN. Tel. 01923 249711 (www.markits.com). These are self-quartering wheels available in OO and EM gauge only.

Ultrascale. Tel. 01462 685327 (www.ultrascale.co.uk)

GENERAL NOTES ON CONSTRUCTION

Read the instructions carefully - preferably more than once - before starting work. Study the diagrams until you become familiar with all the parts and the assembly sequence. We have tried to make these instructions as comprehensive as possible, which may make some assembly sequences appear more complex than they actually are.

Leave the parts in the fret until they are required for use. This will protect them and makes identification simpler. Small holes can be drilled more easily while the parts are still attached. Where an accurate hole size is specified, holes are etched undersized so they can be drilled or reamed out to the correct diameter.

We want you to enjoy building your kit, but remember that even railway modelling has its risks. Frets contain sharp edges, soldering irons get very hot, adhesives may give off toxic fumes, knives and files are designed for cutting. Please be careful . . .

ASSEMBLING THE CHASSIS

The chassis can be built rigid, or with full compensation so the wheels follow the undulations of the track.

Remove the frames (1 & 2) and the firebox sides (3 & 4) from the fret and ensure that they are perfectly flat, straightening them with your fingers as necessary. If you have a rivet press, carefully punch out the rivet detail 'A' at the rear of the frames (see Figures 1 & 2).

The position of the firebox on the frames is crucial as this locates the brakegear and (if fitted) the compensation beams. Use short lengths of 0.5mm wire to locate the firebox sides on the inside of the frames, making sure the firebox parts sit flat against the frames, then solder them in place using the row of holes to add the solder. Finally, cut the location wires and trim them flush at all sides.

First, using flat-nosed pliers, fold over the front (5 x2) and rear (6 x2) spring backing pieces to make them double thickness (Fig.1) ensuring that, unlike most bending operations, the fold lines are on the outside of the bend. Make sure these parts are absolutely flat (this can be done by gently tapping them between two flat pieces of hardwood) Noting that the rear springs have a cutaway to clear the firebox, solder them in place on the inside of the frames then clean off any excess solder

For a rigid chassis, ream out all the axle bush location holes in the chassis frames and solder the 1/8in axle bush bearings in place.

For a compensated chassis, read all of the following carefully: To make the hornblock cutaways, carefully make a slot up the centre lines of the axle locations, taking care not to damage the springs. Use a cutter in your minidrill, a fine fret saw, or a needle file. Now bend the sides of these cuts back and forth, until the metal snaps off to form the rough cutaway shape. Dress up the sides with a file using the remainder of the half-etched marks as a guide. Don't file anything from the top horizontal edge of the slot - this is used to set the hornblocks at the correct height. Finally, use a 0.4mm bit to open out the datum holes (B).

For plunger pick-ups (Alan Gibson, ref. 4M62) you'll need to open out the holes 'C' so the plastic outer sleeve of the pick-up is a tight push-fit. This will drastically reduce strength at the front section of the frames and so great care must be taken until the front spacer is added. Note that for 'OO' chassis, the inner end of the metal plunger tail may foul the rear chassis fixing screw.

If you don't plan to use plungers, then carefully remove the rear plunger carrier and tidy up the edge to achieve the shape shown in the Figure 2.

For all types of chassis, select the spacers (parts 7 - 10) for the gauge in which you model. Open out the holes in the motion bracket and cylinder front face to suit the wires shown in figure 5. Ream out the hole in the front (7) and midway (9) spacers so a length of 1mm wire is a tight fit. Bend up and fit the front and rear L-shaped spacers (7 & 10), followed by part 8 (detail facing backwards) and then finally part 9. Bend up the dragbox (11) - as you do so, clip the drawbar guide (12) into the box – then locate the two parts into the slots on the rear spacer and solder all the bits together to form a solid unit.

Bend gearbox pivot bracket '13' (or 14 for 'OO' compensated – Fig. 9) to shape then open up the hole in the end to suit 1mm wire. Slide a length of wire through the spacer, then locate the bracket on the spacer and pushing it along so the wire goes through both the bracket and the spacer '9' - for a compensated 'OO' model (where the gearbox has to be narrowed and offset to the right of the loco) you'll need to make a 0.7mm dogleg in the wire, as shown in Figure 9. Adjust the wire so it runs level, and with 2mm protruding from the rear end of the bracket, then solder the bracket into the spacer and the wire at both ends to form a rigid assembly.

Refer to the fret diagram, and to Figure 7. Open out the holes in the rods (15 - 20) to suit the components shown in the diagram, and layer them up. Make the holes a tightish fit - you can always open them out a touch more later. Take the middle sections of the rods (15 x2 & 18 x2) and then add the inner and outer layers. Use the fret diagram to identify the parts, remove them from the fret in pairs and solder them to the middle layers, building one rod at a time to avoid confusion.

The rods have an articulated knuckle joint which uses a 0.8mm valve gear rivet as the pivot. For a smooth running chassis, it is essential that these rivets are a good fit in their holes. When the front and rear rod sections are assembled, lightly countersink the holes at the rear of the 'forks'. Put a small amount of oil on the 'tongue' of one of the front rods and slide this into place in the 'fork' on the rear rod. Slot a rivet through the assembly and, very carefully, secure in place by soldering it to the rear rod sections only. Finally, trim the rivet almost flush at the back. Check the joints pivot freely. Do the same for both sides.

For a compensated chassis, bend up six hornblock etches, using the separate instructions supplied. When the units are fitted, the horizontal tab which protrudes from their front face (see Fig. 3) butts up against the top edge of the frame cutaways to set them at the correct height.

Before fitting the bearings into the etches, file off the circular boss from the back of the hornblock bearings for the front and rear axles - this will allow clearance for the slidebars and gearbox, and will also make it easier when it comes to fitting the compensation beams.

Position a hornblock assembly at the middle driver location, making sure you include a 1/8in brass hornblock bearing, which should be lightly oiled to prevent it from being soldered to the etch. Use a short length of 0.4mm wire slotted through the axlebox datum holes ('B' in Figures 1 and 3) to locate it, check it sits vertically and then solder the etch in place. Position an etch and bearing at the opposite side, slot an axle through the bearings, adjust the etch so the axle is at right angles to the frames and then solder the etch in place.

You'll need to trim a small amount from the leading edge of the front hornblock etches (see Fig. 3) so they clear the front spacer. Although the hornblock units can be assembled without any solder, it will make the job easier if you run a small amount between the layers of the hornblock etches. When you've trimmed the hornblock etches, use the coupling rods in conjunction with axle jigs, to position the remaining pairs of hornblock assemblies (complete with lightly oiled bearings, as above) in the chassis and, after having made a final check that everything is as it should be, solder the etches in place.

Trial-fitting the body

The body will require minor surgery before fitting, and this is best done with the cab and front bufferbeam removed. Prise the cab's location tabs from the slots in the rear of the footplate and then, very careful, use a thin blade to break the glue bond between the tops of the rear splashers and the underside of cab at the front. When the cab is removed invert the loco and, working at the rear face of front, inner bufferbeam, push the backs of the buffers outwards whilst gently prising off the outer beam at the centre.

Remove the front mounting pillar from under the smokebox. Use side-cutters to nibble most of it away and then finish off the surface with a burr, so the underside is smooth and follows the circular profile of the smokebox. Turning your attention to the inside of the firebox, cut away the footplate overhang, so the inner, vertical face is smooth and flush - make sure don't cut too far up or you'll remove the visible, front, outer corners of the firebox. At the top of the firebox, grind away the circular location lug on the underside of the safety valve bonnet, and then go on to pare off the six small rectangular pads from the underside of the footplate.

Bend up the front body mount (21) to the shape shown in figure 7 and solder up the side braces to strengthen it, then solder the M2 nut into the recess. Use a strong glue to secure this assembly in place, so it sits centrally, butted right up to the rear face of the front inner bufferbeam. Allow the glue to set.

Try the chassis in place, slotting in the front M2 mounting bolt to centralise it. Mark where the tops of the front railguard braces touch the front beam, then remove the chassis and make two clearance notches in the beam, as shown in Figure 7.

Refit the chassis and check the fit all round – the top edges of the chassis should support the footplate at the front and rear, with the rear face of the spacer '7' extending upwards so it sits between the footplate inner edges to represent the rear of the smokebox. Secure the body, using both front and rear bolts this time (the rear one is supplied with the loco) and then, after having made any necessary adjustments, remove the chassis.

Footplate thickness can vary, so you may need to pack the body up slightly at the front and rear, where it sits on the frame tops.

If you wish, you can fill in the cavity under the boiler, but this is best done later with the motor/gearbox unit fitted to allow you to check clearances.

Inside motion

The inside motion (shown in Figs. 4 - 6) is highly detailed and greatly enhances the model. If you wish, you can simplify things by using only the radius arms and slidebars (parts 25, 26, 31 & 32) and ignoring the other parts. This may be the most sensible option for OO models, as it's difficult to see between the narrower frames.

We provide an etched reverser (illustrated in Figures 1, 5 and 7) as an optional replacement for the clumsy, moulded version on the loco body. For P4 and EM models, the whole reverser linkage (22) is attached to the chassis – for OO models, the bottom part of the rod (23) is fitted to the chassis, with the top portion of the linkage (24) being fixed to the body (Fig7). Before soldering the bits permanently, try them in place and offer up chassis to see how it looks. A certain amount of fettling of the body may be required in order to make the bits fit - for P4 models, you'll probably need to cut away some of the inside face of the splasher (which is too wide).

If you do decide to use our reverser set-up, line up the rod (22 or 23) using a lightly oiled piece of 1mm wire through holes 'D', along with a short piece of 0.5 wire further up, to set the angle and hold it in place. Solder the rod in position, along with the short length(s) of wire, but make sure the 1mm wire can be withdrawn from the fames to leave the crosshaft hole clear. Trim the short wire(s) flush at both sides. OO modellers have the option of replacing the moulding on the body with our etched alternative (24) which can be glued in place so it lines up with the rod on the chassis when viewed from the left of the loco.

Bend up the slidebars (25 & 26 - these are handed parts) slot them through their locations in the spacers and solder them in place, making sure the cutaways are at the bottom and nearest the frames. If the bars are a bit tight in the slots, use a blade to remove the cusp from the edges of the bars.

Whilst still in the fret, drill out all the holes in the droplinks (27- 30), the radius arms (31 & 32) and connecting rods (33 & 34) to suit the wires shown in Figures 5 and 6. Make the 0.7mm holes a fairly loose fit, so a wire can pass easily through them.

Make sure both the small holes in the connecting rods are opened out to the correct diameters, manoeuvre one of them into position and then carefully locate the front end of the rod into the slots in the slidebars ('E' in Fig. 5) springing the bars gently apart to do this. Slot a length of 0.7mm wire through the holes 'F' in the frames, and use this to locate the rear end of the connecting rod and, after checking it runs parallel to the frames, solder the rod into the slidebars. Now gently slide out the 0.7mm wire from the rear of the rod and repeat the procedure for the second connecting rod before removing the support wire.

Noting that the two sides are different, use short L-shaped lengths of 0.5mm wire to locate the droplink and radius arm parts together. Solder them up to make a pair of valve gear assemblies and then trim the wires just proud of the etches to represent the pivots.

Refer to Figures 1, 5, and 6. Locate the ends of the valve gear assemblies in the outer (smallest) holes near the centre of the motion bracket. As you hold them in place, slot a length of 1mm wire through the reverser shaft holes 'D' in the frames and use this to hold the valve gear assemblies in place. Solder only the shaft in place in the frames - the valve gear assemblies must be free at this stage - and trim the ends of the shaft very slightly proud of the frames. Now slot a length of 0.7mm wire through holes 'F', and through the assemblies and the rear of the conn rods. Make any necessary adjustments to the parts, so they lie vertically and run parallel to the chassis, and then solder them onto the support wire and the reverser shaft.

Bend the top of the slidebar top layers (35 x2) to shape, and solder them in place. Use a length of 0.5mm wire to locate the crosshead details (36 x2) on the slidebars and connecting rod ends, noting that the pin is slightly offset towards the front. You can solder or glue this part in place, and then trim the wire almost flush at the front of the crosshead.

For the valve spindles, slot lengths of 0.8mm wire through the front spacer, into the holes in the motion bracket, and solder in place. Because of the width (or lack of) these have been omitted for OO gauge engines. Finish off the valve gear by adding the piston rods, which can be represented using 2 lengths of the same wire, pushed through the front spacer with the ends located in the notches in the crossheads. The easiest way to do this is to use longish lengths of wire, which will enable you to manoeuvre them into position before soldering them in place. When they're secured, use a burr to cut off the excess length, so the ends are more or less flush with the front face of the spacer.

Locate the tabs on the footplate supports (37 x2 & 38 x2 – Fig. 1) into their slots and solder them in place.

Bend the ends of the vacuum pump body (39) through 90 degrees and then cut a length of 1.6mm OD tube, so it's a snug fit between the ends. Use a length of 0.8mm wire to locate the tube, slotting the wire through the ends and through the tube, as shown, then solder the parts together leaving about 5mm of the wire proud at the right of the assembly. Now slot the tab on the pump top (40) into the location in the body, solder it in place, then trim off the excess tab, so it’s flush with the rear of the plate. Bend the small lugs on the rear of the pump assembly up through 90 degrees and then use these to locate the finished pump on the inside face at the left hand frame, slotting the protruding 0.8mm wire through the motion bracket as you do so.

Add the footplate support rivet strips (41 x2 & 42 x2) using either solder or glue. If you do use solder, wedge something between the motion and the pump assembly to prevent the pump from coming loose when you apply heat.

Fold over the tab at the top of the railguards (43 & 44) and use the tab to locate them on the chassis - if you wish you can add short lengths of 0.4mm wire to represent the bolt heads - then solder the guards in place, with the front edge vertical as shown. Make the 45 degree bends and then strengthen these with a small amount of solder. The basic chassis can now be cleaned up, ready to test-fit to the body.

Compensation

If you’re building a compensated chassis, bend the small cantilever tab 'G' in the front spacer (7) down through 90 degrees. Slot a 9mm length of 1mm diameter silver steel rod through the holes in the tabs and spacer, so the end of the rod stops about 1mm beyond the centreline of the front hornblock - this will be the pivot for the front wheels. When in place, the rod should be more or less horizontal.

To fit the compensation beams, cut 2 lengths of 1.6mm O.D. tube, so they fit snugly between the frames, but without being tight. Ream out the central hole in the compensation beams (45 x2) so the tube is a good fit, and then open out the beam pivot wire hole 'H' in the sides of the firebox to 0.8mm diameter.

Position the beams 0.4mm from the edge of the tubes, and solder them in place to make a handed pair. Manoeuvre the assemblies into position, so their 'feet' sit on top of the brass hornblocks - this is illustrated in the cutaway view in Figure 4 - and then slot a length of 0.8mm wire through the holes ('H' in Fig. 1) in the firebox sides, and through the tubes. Check the beams pivot freely - if they don't, look for obstructions: tabs or wires which may be protruding inside the frames; if the beams are catching on the hornblock etches or the sides of the slot in the firebox front spacer. Ensure that the beams sit parallel to the frame sides. It's essential that the beams and hornblocks work correctly together, in a smooth see-saw motion with no tight spots. The pivot wire can be trimmed slightly proud at each side to represent firebox washout plugs.

Setting up the chassis

Temporarily fit the driving wheels, including any washers that may be necessary to eliminate sideplay. Try pushing the chassis around your curves, to see how much sideplay you actually need - this applies to both rigid and compensated chassis. In OO and EM gauges, we've allowed for up to 0.5mm sideplay (total 1mm) on the middle axle. For P4, the sideplay should be no more than 0.3mm either side. If the chassis still won't go around your curves, allow a small amount of sideplay at the outer axles.

For a rigid chassis, the ride height and levels shouldn't really need adjusting. If you're building a compensated chassis, then you may need to make some very fine adjustments. You can alter the height at the back of the loco, either by filing the ends of the compensation beam, or by attaching a small amount of packing onto the tops of the hornblock bearings. The front end of the loco can be raised or lowered, simply by tweaking the end of the silver steel pivot rod. It may be wise to fit the body at this stage, so you can check the overall levels. When the chassis sits level, and at the correct height, trim the compensation beam pivot wire to length (to the same overall width as the chassis) and then fix it into the firebox with a small amount of glue at one end only. Make sure the glue doesn't penetrate into the tube.

Brakegear assembly

This method of assembly creates a set of brakegear that is fully removable, as well as totally prototypical in appearance. Do not solder anything until the instructions specifically say so. Figure 4 shows the how the completed brakegear assembly integrates with the chassis.

The brake hangers have small folding tabs at the tops of the front layers (parts 46 to 49) which spaces them the correct distance from the frames. For P4 wheels, which are narrower than OO/EM, the small pieces ('J' in Fig. 1) will need to be filed off.

Note that the front pair of hangers are different, as they have a location for the sandpipe. Make the bend at the top of the hanger front layers (46 to 49) as above. To model the hangers as solid units, which is the sturdiest option, - push a length of 0.5mm wire through the central hole and locate the middle (50 x6) and back (51 x3 & 52 x3) hanger layers onto the front. Solder all the layers together and then trim the wire flush at both sides. Repeat this process for all the hangers, so you have three handed pairs, and then check the top and bottom holes are free from solder.

Alternatively, you can model the hangers with prototypical daylight between the front and back layers. To do this, remove the bottom part of the double hanger middle layers (50) and, when you come to fit the assembly onto the brake stretcher wire, include the double hanger spacer washers (53 x6 - see Fig.1)

Clean out any excess solder from the rear corners of the footplate supports, which are attached to the chassis. You can also file a small chamfer the leading edge of the spacer tabs, to allow the hangers to sit hard up against the webs and right in the corners.

For the rear pair of hangers, you'll need to make a dog-leg in the crosswire to allow it to clear the worm at the bottom of the gearbox (also Fig. 4). Bend a 40mm length of 0.7mm diameter wire to the shape shown in Figure 1, so it matches the crosswire strengthener (54) and with the bend roughly central along the length of the wire. Solder it to the etch and then keep this assembly for the rear pair of hangers – the others wires use straight lengths.

Take one of the front hanger assemblies (including washer '53', if applicable) and, using a 30mm length of 0.7mm diameter wire for the brake stretcher, slot this wire through the bottom hole. Solder the wire in place so about 5mm protrudes from the outside face of the hanger. Take an opposite handed hanger assembly, slot this onto the long end of the 0.7mm wire, then offer this assembly up to the chassis at the front brake location. Slide the loose hanger along the wire, so both hangers move up to the chassis sides and then slot a length of 0.5mm wire through the holes at the tops of the hangers, and through the chassis at holes 'K'. Push the hangers hard up against the wheels, and up to the chassis sides and then, after checking that they are parallel and lying at the

same angle, carefully solder the loose hanger assembly to the stretcher wire - do not solder anything to the chassis. Now slide the wire out from the top and remove the hanger assembly. Repeat this process for the middle set of hangers.

The procedure is similar for the rear hangers, but uses the pre-bent, doglegged crosswire. Slot this wire through both remaining hangers and offer them up to the rear location, hanging them on a loose top wire, as above. Nip the hangers up to the chassis then, after making sure the dogleg is central and horizontal between the hangers, and ensuring that the hangers are sitting vertically, solder the stretcher wire in place at one side. Double check all the position of all the parts and do the same at the other side, then slide out the top wire.

With the hanger assemblies removed, take the middle and rear pair, and slot a continuous length of 0.5mm wire through their tops, so it bridges between the two sides. Solder it in place using generous amounts of solder. Trim this wire almost flush with the outside face of the hangers, then carefully cut away the middle, leaving about 0.5mm protruding from beyond the innermost edge at the top of the spacer tab. Trim the wires very slightly proud at the outsides and then remove any burrs from the inner ends.

After cleaning off any excess solder you can fit all the hanger assemblies up to their stations. For the rear and middle hangers, do this by lightly pulling the tops of the hangers outward, then clip them into the location holes in the frames. Use a continuous length of wire to locate the front hangers, and then you're ready to fit the brake pull rods.

Brake clearances

With the hanger assemblies in place, you can set the clearances for the brakes. Solder a 30mm length of 0.5mm wire between the small holes 'L' at the rear of the frame, so an equal amount protrudes at each side. Now take one of the inner pull rods (55 & 56) and manoeuvre it up behind the rear wheel, so it sits hard up against the firebox. Hook the front end of the rod over the top of the rear brake stretcher wire, with the rear end located on the small wire at the back end of the rod. Double-check that the notch at the front of the pull rod is located fully down on the brake stretcher, and then solder the rod to the firebox sides, making sure you don't accidentally solder the stretcher (the bottom wire between the rear hangers) in place. Repeat this at the opposite side of the loco.

Note that the brake cylinder castings (57 & 58) are a handed pair. Working on one side of the loco, open out the larger hole ('M' in Fig. 2) so the mounting pin on the brake cylinder is a good fit. Locate the cylinder in place with the small wire (from hole 'L') running along the groove at the rear of the cylinder and solder the casting to the chassis. If the wire won't is tight in the groove, or won't go in at all, open out the groove using a fine fret saw. Repeat this procedure at the other side of the chassis.

Slot the front, outer pull rods (59 x2) over the ends of the stretcher wires at the bottom of all of the brake hangers. Do the same for the front end of the rear, outer pull rods (60 x2) which sit outside the front rods, sliding the rear end of these rods over the small wires at the rear of the brake cylinders.

Invert the chassis and push the rear rods hard up against the brake cylinders to set the distance from the wheels, then set these rods so they run parallel to the chassis, as illustrated in Figure 7. Now move the front pull rods up to the inner face of the rear rod and look at the distance between the backs of the rods and the wheel faces. Take into account the sideplay on the axles - with the wheels pushed fully over to one side, we suggest a minimum of 0.3mm clearance, which can be set using a piece of brass wire. If you need extra clearance, fit one of the packing pieces (61 and/or 62 - see Fig.1) to the outside of the brake cylinder and re-adjust the rod so it runs parallel. When satisfied all is well, solder the pull rods to the stretcher wires, but leave the rear ends of the short rods loose at the brake cylinders.

Refer to Figures 4 and 8. Cut out the length of wire which spans between the brake cylinders and then trim the remaining outer ends of this wire, so they protrude by about 0.5mm beyond the outer face of the brake rods. The brakegear can now be removed by pulling the supporting wire from the front of the chassis, springing the other hangers from their locations and carefully springing out the rear of the rods from the short wires at the brake cylinders. Finally, fit the small, cosmetic end pieces (63 x2) to the rear of the brake cylinder, making sure you don't disturb the position of any of the components.

When you come to refit the brakegear, offer it up into position, slot a long wire through the hangers at the front, and locate the remaining hanger pins in their locations as you spring the rear ends of the pull rods over the small wires on the brake cylinders.

When the brakegear is off, remove the wheels and fit the balance weights (64 x2) as shown in Figure 1 - epoxy is best for this. Make sure they lie flat and don't foul the rods. Now clean up all the parts ready for painting.

Invert the loco and locate two L-shaped lengths of 0.4mm wire into the front brake hanger assemblies to represent the sandpipes. Shape the wire so it runs down to the wheels, as illustrated in Figure 7. Check the brakegear can be removed without the pipes fouling on anything.

Gearbox assembly

Study Figure 9. Before cutting the gearbox etch (65) from the fret, progressively drill out or ream each of the holes to accommodate the gearshaft and bushes, shown in the diagram. Components should be offered up until they are a tight push-fit in their holes. Once the gearbox is assembled, the shaft are fixed but the gears are free to revolve. Remove burrs by inserting the tip of a drill bit (of much larger diameter than the hole) and gently rotating it between your fingers.

If you're modelling in OO ***and*** you intend to compensated the loco, then the standard gearbox will need to be modified so it fits between the hornblocks. To do this, remove area 'N', by cutting through the small tab 'P' and then bending the etch back and forth until it snaps away. Now proceed as below, using what's left of the gearbox.

Solder the 1/8in bushes into place with the larger-diameter shoulders on the same side of the etch as bend lines. Using flat-nosed pliers to prevent the thin sections from buckling, bend the gearbox shell to shape, as indicated - a three-sided box with all bend lines on the inside of the gearbox - and then strengthen the inside corners with fillets of solder. Carefully file equal amounts from the non-shouldered face of the bushes to length, so the gearbox shell fits between the bearings in the frames. For hornblocks, be sure to allow enough clearance for the hornblock to slide freely.

For OO compensated models, bend up the OO gearbox dogleg (66) add an axle bush to it and file the shoulder on the bush flush, as above. Solder this assembly securely in place (see Fig. 10) using an axle to align it.

Solder the stage one spacer (67) into its location, using a length of gearshaft to position it and file off the protruding tab flush at the rear, so the motor mounting plate is smooth. Bend over the small anchor tab 'R' and strengthen with solder, as above, and then open up the hole in the tab, so a 1mm wire is a good fit. Add the gearbox pivot re-enforcement (68) to the outer face of the hole, as shown.

Using a carborundum disc in a mini-drill, cut the 2mm gearshaft, so its length equals the overall width of the gearbox. Wear effective eye protection – cutting discs can and do disintegrate if they snag. Remove any burrs with a fine file. Offer up the shaft to its location. Because it's a tight fit, you will only be able to pass it through both sides of the gearbox if it is truly square. If it won't go through, then the gearbox hasn't been folded accurately. Light finger-tweaking should put things right.

De-flux the gearbox by scrubbing with household cleaner, then rinse and allow to dry. Check that the gears themselves are free from any dust or swarf left over from manufacture. Cut a length of insulated wire into two equal lengths and solder to the motor brush tags. Insulate the terminals with tape. For testing, connect the other ends to the output leads of your controller.

The stage 1 double gear will be one of three types - 15/10T (30:1), 20/10T (40:1) or 27/10T (54:1) - depending on the overall reduction ratio of the gearbox. Fit the stage 1 gearshaft and the double gear (according to ratio) then temporarily fit the axle, along with the brass 20T. gear and check that the gears revolve smoothly.

Some brass worms supplied to us are fractionally tighter than others and if they aren’t an easy push-fit, they can be gently forced onto the shaft in a vice. Hold the motor by the rear of the shaft and don’t use excessive force or the shaft may bend. Instead, use a broach to ease the fit of the worm and then, if necessary, secure the brass worm with a small drop of Loctite 601 at the outer end of the motor shaft. Because clearance inside the firebox is limited, it’s necessary to trim off the rear shaft of the motor. Cut it almost flush with the motor casing, using a cutting disc (and eye protection), as above.

Fit the worm onto the motor shaft (at the mounting screw end) so it’s mid-point is about 6mm from the motor face (i.e. - so the worm lines up with the stage 1 gearshaft when the motor is fitted into the gearbox). Sight through the opening in the gearbox sides to check the mesh with the worm - there should be daylight between the gear and the worm, but avoid having too much backlash. If necessary, loosen the motor fixing screws, adjust the mesh and then lightly glue the shaft in place at both ends. Now test the gearbox under power and then, when all is well, remove the driven axle and brass gear.

The gears are effectively self-lubricating but a little plastics-compatible grease will do no harm. Do not use general-purpose modelling oil, which attracts dust and grit. Metal-on-metal contact areas (motor bearings, axle bushes) should be lubricated with a tiny amount of ultra-adhesive oil, but don't use this until the final drive gear has been secured in place (see below).

Final assembly.
Refer to Figures 4 and 9. Slide the anchor lug 'R' on the gearbox over the wire that protrudes from the midway spacer, and position the motor/gearbox unit so it sits between the rear axle bushes or hornblocks. Slot the driven axle through the frames and gearbox, slipping on the final drive gear as you go.

The kit includes axle washers of varying thicknesses, which can be used to limit axle sideplay. Fit all the wheelsets, complete with crankpins, and quarter the wheels, - the right hand cranks lead by 90 degrees. Now add the bushes to the crankpins, followed by the coupling rods, and check for free running before fitting the securing nuts.

Push the chassis along the track - it should freewheel smoothly - then fit the body and check the rods don't catch anything. Give the motor a quick burst of power, just to check it's not binding on anything, and then secure the final drive gear using a small amount of Loctite before testing the loco under power on your track. Once you're happy with the way it runs, remove the body and refit the brakegear, as described previously, and give it another quick test-run to check nothing catches the wheels.

It's a fairly simple job to fill in the cavity in the boiler/firebox, using 'Plasticard', suitably shaped. When you come to make the new firebox, the bottom edge should sit just above the top of spacer '9' and the material can be up to 1mm thick - any more than this, and the movement of the motor/gearbox will be impaired. Be sure to fit the chassis and make a final check of the clearances before gluing the firebox front it in place. If you've fitted our etched reverser arrangement, check this doesn't catch the firebox front.

Fitting the Drawbar
The drawbar is designed to pivot a both ends, which will allow closer coupling of the tender. To fit the drawbar, first, layer up the drawbar halves (69 x2)

A series of holes is provided in the drawbar, which will to allow you to set the distance between your loco and tender to suit your curves (see Fig 1). With our own High Level Tender Chassis (where the drawbar pin in situated approximately 3.2mm from the tender bufferbeam face) using holes 'A' and '1' in the drawbar will give approximate scale spacing of 3mm between the loco and tender bufferbeams.

If this is too close for your curves, try using hole 'B' in conjunction with hole '3' which increases the gap by 1mm. If this still isn't enough then A - 3 will give a further 1mm (a 5mm gap) and, as a last resort, B – 3 gives a massive 7mm gap.

The shape of the front end of the drawbar is important, as the top surface of this part bears on the underside of part 12 to prevent the bar from drooping down at the rear. After deciding which drawbar pivot centres to use, trim the drawbar to length, so your chosen holes are outermost - if you're using hole 'B', then lay one drawbar half over the other, so hole A in the top layer is directly over hole B on the bottom etch. Stick a bolt through the hole to keep them lined up, then use the top layer as a guide to scribe the radius profile on the bottom bar. Now line the etches up directly on top of one another, so the scribed line is visible on the top etch, solder them together then trim them to shape using the scribed line as a guide. If you're coupling the tender up to the High Level Dean Tender Chassis, and you're using hole '1', refer to the tender instructions. Because of the close proximity of the tender brake cylinder, you may need to extend the narrowed area of the drawbar by about 1mm to prevent it from catching.

Fix the plastic body in place, using the front M2 fixing bolt, along with the rear screw supplied with the loco. As you fit this, include the drawbar assembly, which slots between the plastic mounting boss on the body and the top surface of the rear spacer (Figure 8) Washers 70 and 71 are included to allow you to adjust the clearance - aim for a small amount of up and down movement at the tender end of the drawbar when the fixing screw is fully tightened.

The rear end of the drawbar is designed to slot over a 1mm diameter pin on the tender, and for this we recommend using a length of 1mm silver steel, which can be glued into a hole drilled into the underside of the tender footplate area. This hole should be positioned approximately 3.2mm behind the tender bufferbeam (see above). For tighter curves, you may find that reversing with a heavy train can cause the tender to derail. If this happens, it may help if you fix the drawbar, so it is solid with the loco and pivots only at the tender end.

CHASSIS KIT FOR DEAN GOODS

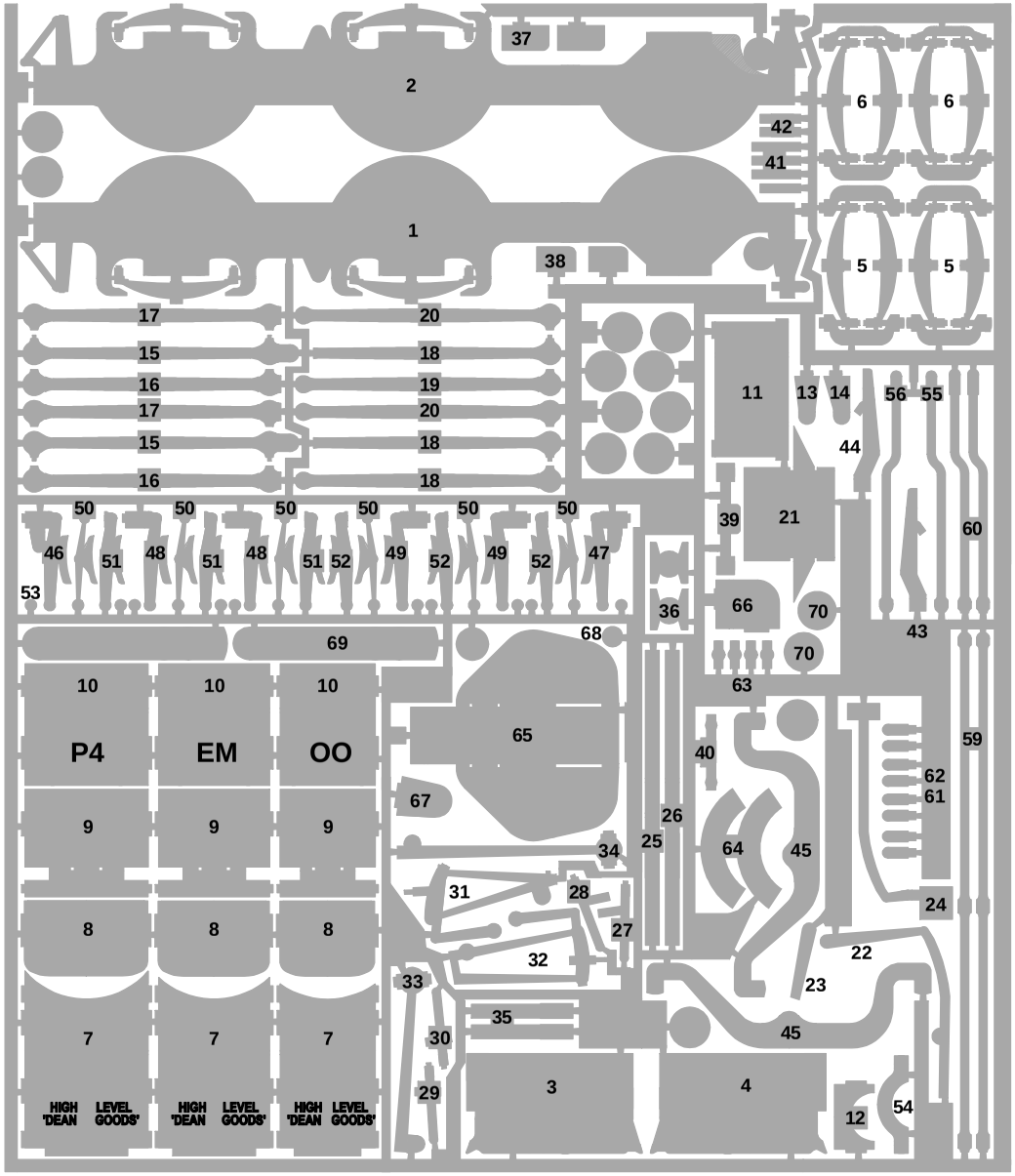

PARTS LIST

1. Chassis Frame LHS
2. Chassis Frame - RHS
3. Firebox Side LHS
4. Firebox Side RHS
5. Spring Backing Pieces, front x2
6. Spring Backing Pieces, rear x2
7. Front Spacer
8. Motion Bracket
9. Firebox Front
10. Rear Spacer
11. Dragbox
12. Drawbar guide
13. Gearbox Pivot Bracket - Straight
14. Gearbox Pivot Bracket - Offset
15. Front Coupling Rod, Middle Layer (x2)
16. Front Coupling Rod, Inner Right, Outer Left (x2)
17. Front Coupling Rod, Inner Left, Outer Right (x2)
18. Rear Coupling Rod, Middle Layer (x2)
19. Rear Coupling Rod, Outer Left, Inner Right (x2)
20. Rear Coupling Rod, Inner Left, Outer Right (x2)
21. Front Body Mount
22. Reverser Rod Assembly EM/P4
23. Reverser Rod – OO only
24. Reverser linkage - OO only
25. Slidebars - LHS
26. Slidebars - RHS
27. Droplink - LHS Outer
28. Droplink - LHS Inner
29. Droplink - RHS Outer
30. Droplink - RHS Inner
31. Radius Arm - LHS
32. Radius Arm - RHS
33. Conn Rod - LHS
34. Conn Rod - RHS
35. Slidebar Top Layers (x2)
36. Crosshead Details (x2)
37. Midway Footplate Support (x2)
38. Rear Footplate Support – (x2)
39. Vacuum Pump Body
40. Vacuum Pump Top
41. Footplate Support Detail, Midway (x2)
42. Footplate Support Detail, Rear (x2)
43. Railguard - LHS
44. Railguard - RHS
45. Compensation Beams
46. Brake Hanger, Outer layer, Front, LHS
47. Brake Hanger, Outer layer, Front, RHS
48. Brake Hanger, Outer layer, Mid/rear, LHS
49. Brake Hanger, Outer layer, Mid/rear, RHS
50. Brake Hanger Middle layer x6
51. Brake Hanger Rear Layer, LHS x3
52. Brake Hanger, Rear Layer, RHS x3
53. Hanger Spacer Washer x6
54. Crosswire Strengthener
55. Inner Pull Rod, LHS
56. Inner Pull Rod, RHS
57. Brake Cylinder LHS
58. Brake Cylinder RHS
59. Front, Outer Brake Rods x2
60. Rear, Outer Brake Rods x2
61. Brake Rod Packing 0.2mm
62. Brake Rod Packing 0.4mm
63. Brake Cylinder ends (x2)
64. Balance Weights (x 2)
65. Gearbox
66. Gearbox Dogleg
67. Stage One Spacer
68. Gearbox Pivot Re-enforcement
69. Drawbar Halve x 2
70. Drawbar Spacer Washer

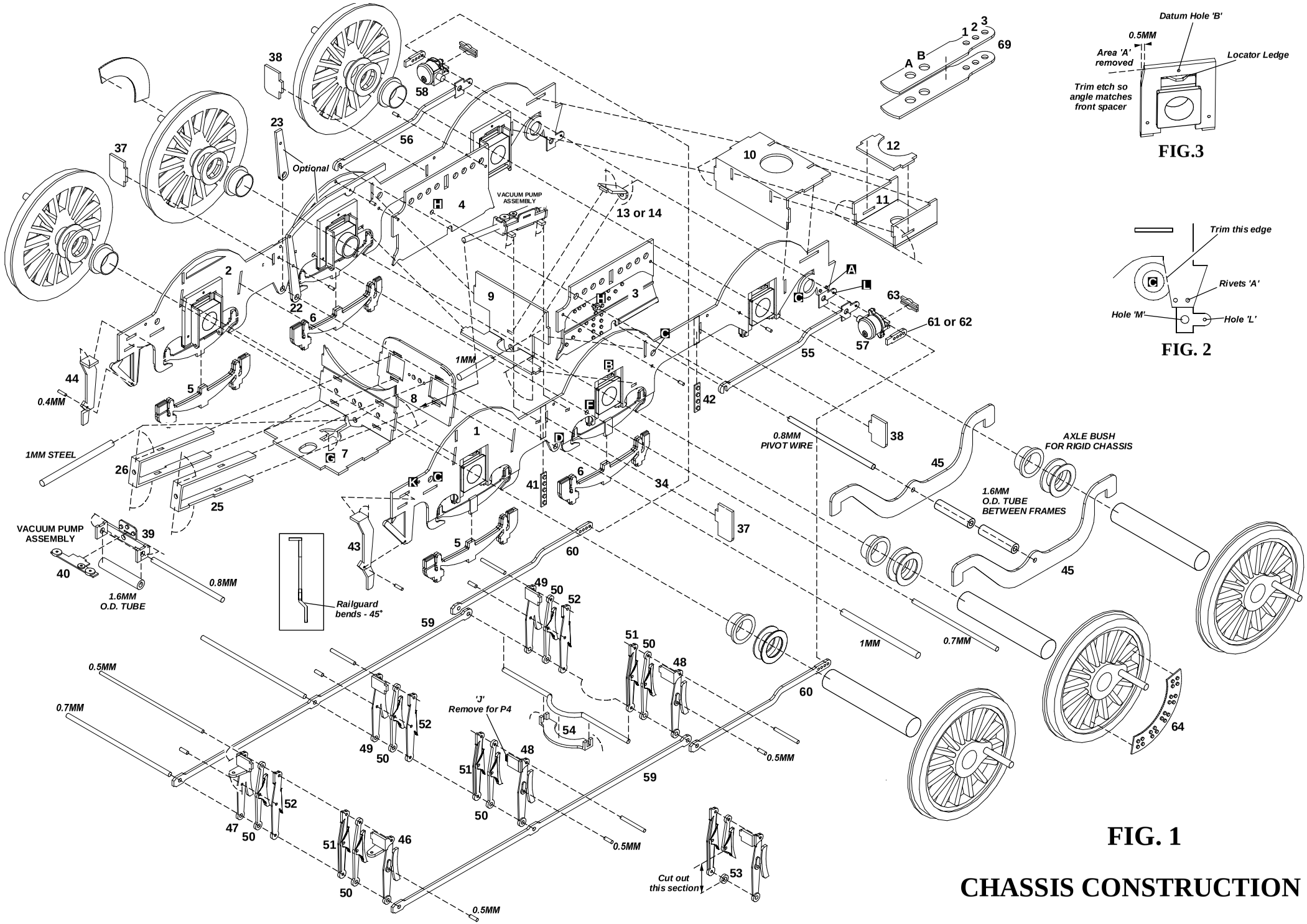

FIG.3

FIG. 2

FIG. 1

CHASSIS CONSTRUCTION

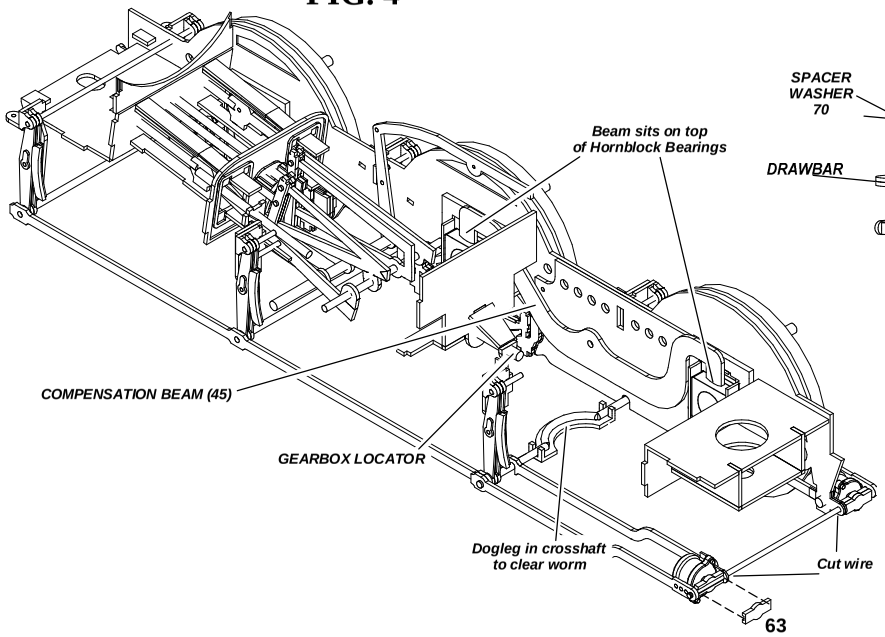

FIG. 4

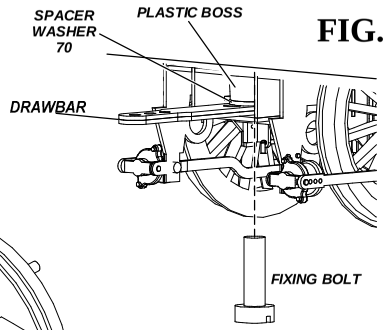

FIG. 8

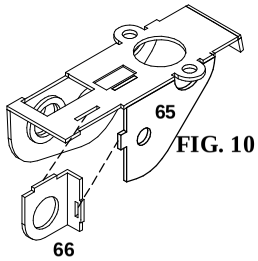

FIG. 10

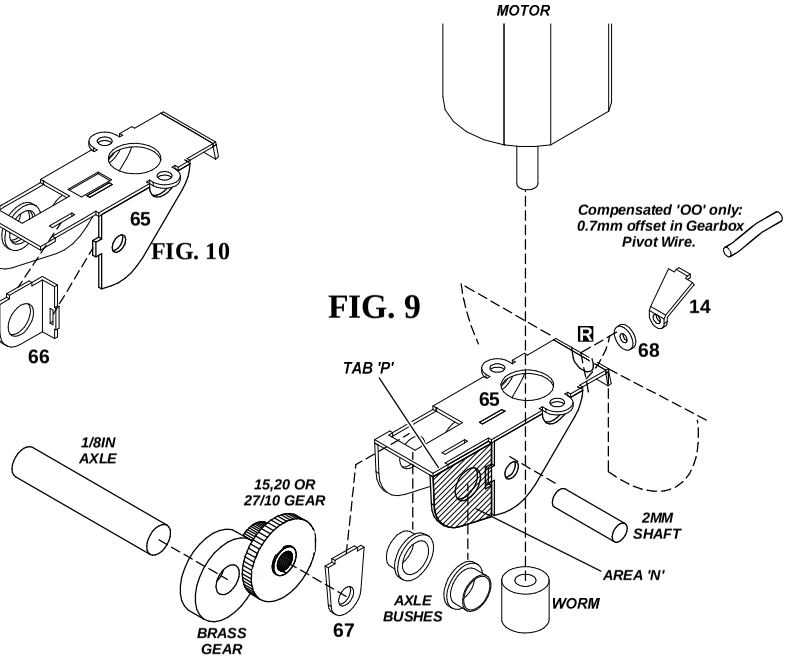

FIG. 9

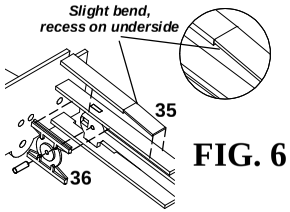

FIG. 6

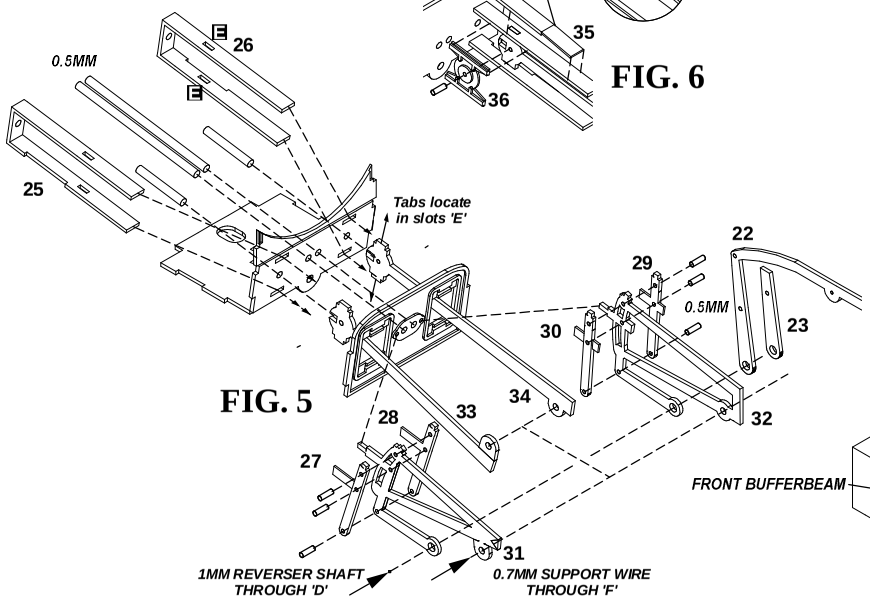

FIG. 5

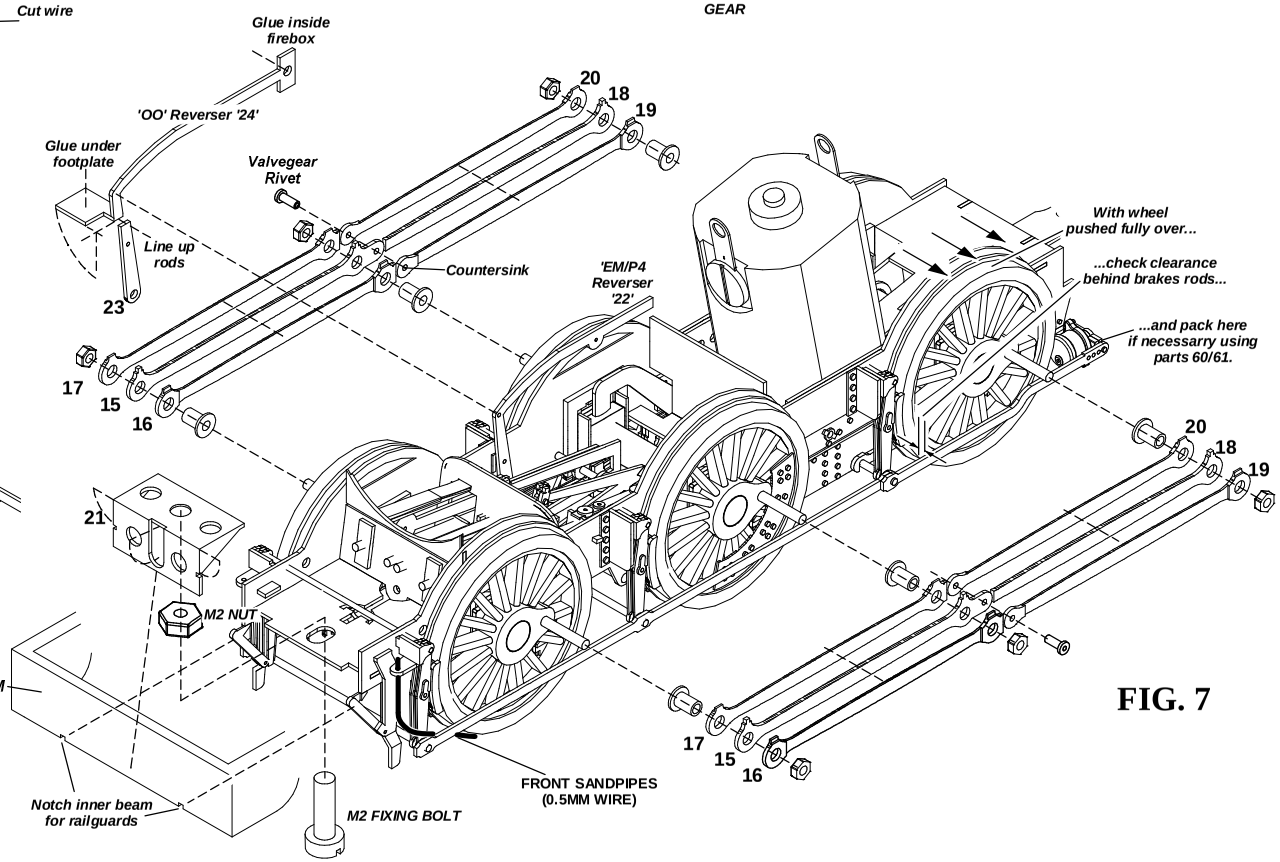

FIG. 7

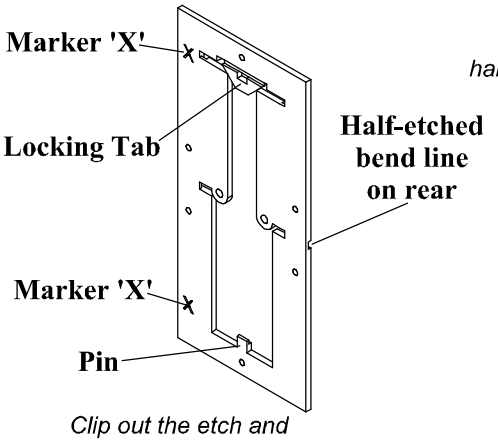

Clip out the etch and clean off any mounting tabs.

Fold the etch through 180 degrees, so the markers 'X' face each other. The half-etched line is on the outside of the fold.

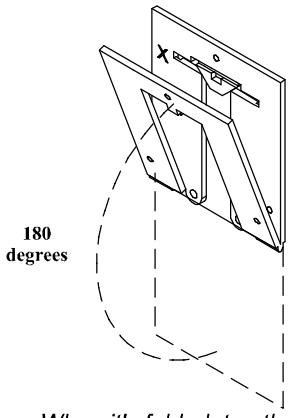

When it's folded, tap the layers between two pieces of hardwood, so they sit absolutely flat.

Hold the layers tightly together and fold the locking tab through 90 degrees, so it locates on the small pin.

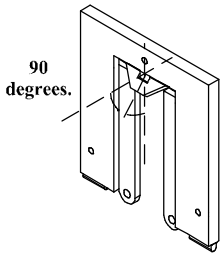

The end of a flat, pointed needle file is a good tool for this job. The tab locks the layers together, eliminating the need for solder.

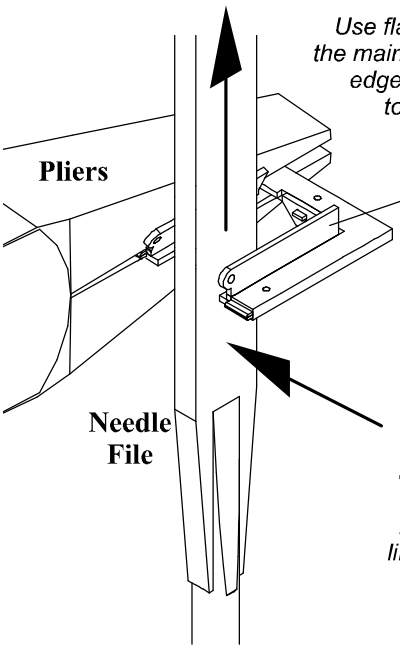

Use flat nose pliers to grip the main etch,with the straight edge of the pliers close to the bend line.

Bend the horncheeks up through about 80 degrees, using a flat needle file to apply upward and sideways pressure simultaneously. In this case, the half-etched line is on the inside of the fold

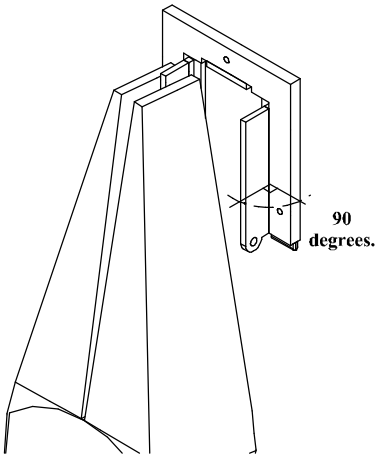

Finish off the horncheek bends so they are at 90 degrees. Check this through a magnifying glass and adjust as necessary.

Use fine emery to clean up the bearing, remove any burrs and then try it in place - the groove on the block locates on the front layer of the etches.

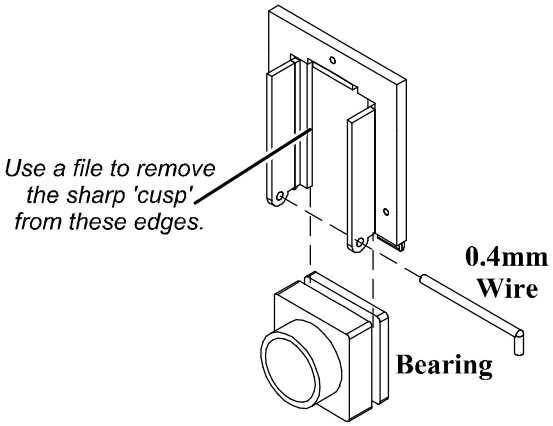

When the bearing is fitted, slot a length of 0.4mm wire through the bottom holes to keep it in place.

The completed assembly can now be soldered to the inside face of the chassis, using axle jigs. If you fit it with the bearing in place,make sure the sliding surfaces are lightly oiled, to prevent the bearing being soldered to the etch.

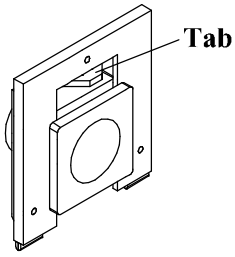

The tab is designed to sit exactly 4mm above the axle centre line, with the loco on level track. The top edge of the cut-outs on most chassis is also 4mm above the axle centre, so the tab can be butted against the top of the cut-out to set the unit at the correct height.

HIGH LEVEL, 14 TUDOR ROAD, CHESTER-LE-STREET, CO. DURHAM, DH3 3RY.
TEL. 0191 3882112.